

RING 1

Item code	**85.FL30.100P3.03.AHEA**
Product type	**Outdoor**
Category	**Floodlight**
Family	**RING**
Subfamily	**RING 1**
Pictograms	CRI 80 · CE · IP 67 · DALI

Dimensions	
Product dimensions (mm)	**φ240*H295mm**
Mounting arm dimensions (mm)	**Custom-made**

Product	
Real power (W)	**100**
Real luminous flux (Lm)	**9207**
Luminous efficiency (Lm/W)	**93**
Input	**AC 220-230V 50Hz**
Beam angle (º)	**30°**
Life time (h)	**50000h L90 B10**
IP	**67**
Driver	**Included-Integrated**
Control gear	**DALI 2**
Net weight (g)	**7500g**
Colour temperature (K)	**3000K**
Colour consistency (SDCM)	**SDCM2**
CRI	**80**
IK	**08**

Scheme

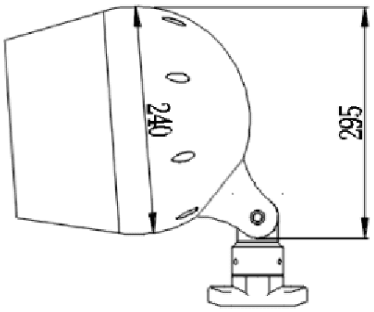

Accessories



Anti-glare